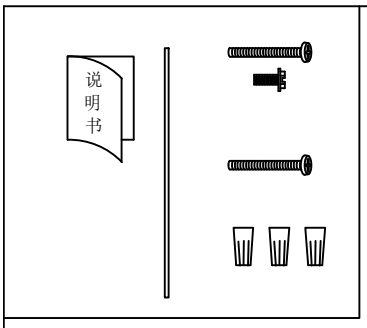

UL SPECIFICATION

* FIXTURE SHALL BE LISTED FOR LOCATION ONLY AND LABELED AS SUCH.
* FIXTURE MUST BE MANUFACTURED IN ACCORDANCE WITH UL STANDARD 1598.

PARTS SPECIFICATIONS

ITEM	QTY	DESCRIPTION
A	(1)	SOCKET- UL LISTED/CSA CERTIFIED BASE= MEDIUM SOCKET= PORCELIN
B	(1)	LEAD WIRE- 120"FROM FRAME TOP UL LISTED/CSA CERTIFIED, BLACK SVT FABRIC WIRE.

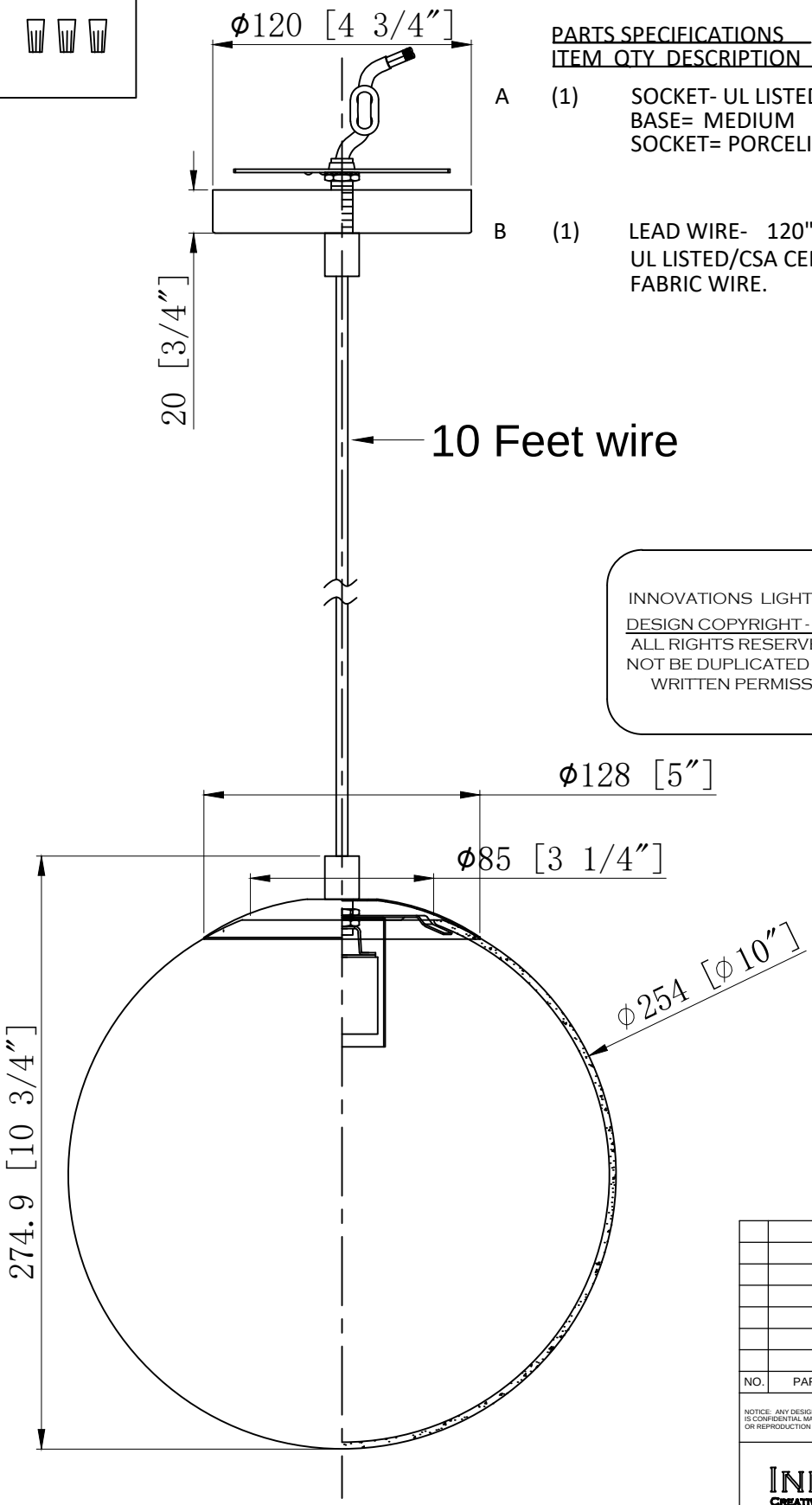

INNOVATIONS LIGHTING
DESIGN COPYRIGHT - 01/07/2021
ALL RIGHTS RESERVED AND MAY NOT BE DUPLICATED WITHOUT OUR WRITTEN PERMISSION

NO.	PART NO.	DESCRIPTION	REQ.

NOTICE: ANY DESIGN OR OTHER INFORMATION HEREON DEVELOPED BY THIS COMPANY IS CONFIDENTIAL MATERIAL AND EXCLUSIVE PROPERTY OF THE L.D. ALIYA CO. DISCLOSURE OR REPRODUCTION REQUIRES THE WRITTEN CONSENT OF THE L.D. ALIYA CO.

INNOVATIONS
CREATIVITY MEET:~ EVOLUTIONARY DE:~IGN®

DRAWN IN THIRD ANGLE PROJECTION

"mm" DIMENSION INDICATED IN [ ]
DIMENSION IN [ ] IS FOR REF. ONLY

TOLERANCES (EXCEPT AS NOTED)

DECIMAL	ANGULAR	FRACTIONAL	SCALE
NONE ±.031 .X ±.015 .XX ±.010 .XXX ±.005	± 1/2°	± 1/32	1:7

DATE	DRAWN BY	CHECKED BY	APPROVED BY
01/07/2021		X	X

TITLE
10" 1LT PENDANT

PART NO. PENDANT REV.

ITEM NO. 610-BK-SDY REV. A